ALU_2025

ALU_HW1
說明、注意事項

Department of Computer Science and Engineering
National Sun Yat-sen University
E-mail: hssiang@g-mail.nsysu.edu.tw (王敬翔)
2025.09.22

Outline

- 1、測試資料
- 2、top module、檔案命名限制
- 3、TB
- 4、HW1 目錄建立方式與流程
- 5、Report.pdf
- 6、繳交檔案
- 7、評分標準

1、測試資料

- 測資部分格式為IEEE754單精度16進制的格式，僅供參考可自行增加(不可自行減少)
- a.txt、b.txt為100筆input data，供乘法、加法使用

```
558b4567
51bc9869
5a30dc51
3568944a
318e1f29
3e9b58ba
373141f2
5ce2a9e3
485f007c
29200854
2116231b
2890cde7
2a0e0f76
281cf92e
5fdcc233
40a7c4c9
46eafb66
489b500d
```

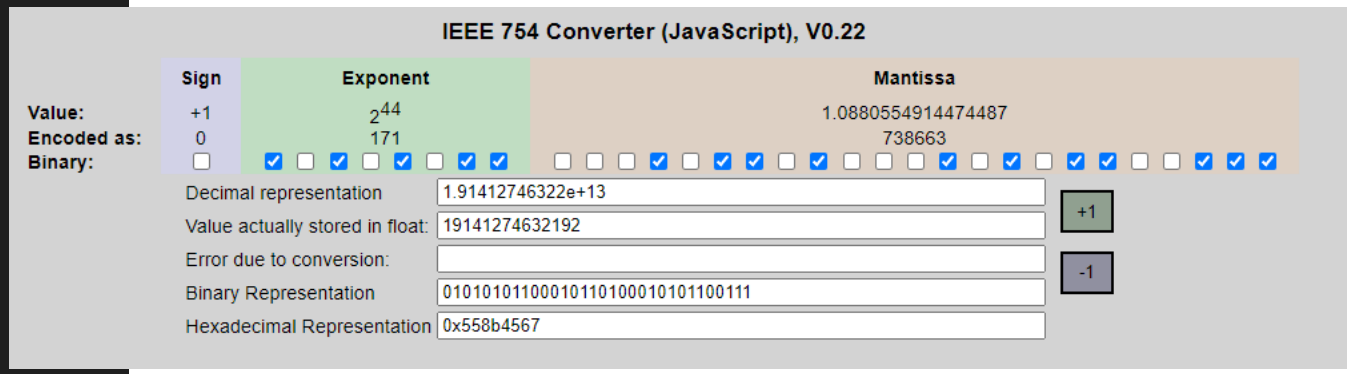

2、top module、檔案命名限制

- 作業的top module請按照以下命名規則及input、output順序
  - Fix point版本 RTL, Gate Level **不評分**，但需要在報告中與其他電路比較
  - a, b : 32 bit input
  - d : 32 bit output
  - clk, rst : 1 bit input

```
module FLP_adder(a, b, d);
module FLP_adder(clk, rst, a, b, d);
module FLP_mul(a, b, d);
module FLP_mul(clk, rst, a, b, d);
```

- .v檔名請以 **<top module name>_<pipeline number>**方式命名
  - 如 : FLP_adder_4.v 或 FLP_adder.v

3、TB（pre_sim）

```
// FXP_ADDER / FXP_MUL / FLP_ADDER / FLP_MUL / FLP_ADDER_7 / FLP_ADDER_4 / FLP_MUL_4
`define FLP_adder

// Standard Delay Format File
// `define SDFFILE    "./FXP_adder_syn.sdf"

`timescale 1ns/1ps
`define CYCLE 5.0
`define DATA_NUM 100
`define FILE_A "./a.txt"
`define FILE_B "./b.txt"
`ifdef FXP_adder
    `define FXP
`elsif FXP_mul
    `define FXP
`elsif FLP_adder
    `define FLP
`elsif FLP_mul
    `define FLP
`elsif FLP_adder_7
    `define PIPE 7
    `define adder
`elsif FLP_adder_4
    `define PIPE 4
    `define adder
`elsif FLP_mul_4
    `define PIPE 4
    `define mul
`endif

module testbench();
```

可以修改來測試各種電路

3、TB（pre_sim）

```
[2022_alu03@devotion tb]$ ncverilog -f nc_pre_syn.f
ncverilog(64): 15.20-s039: (c) Copyright 1995-2017 Cadence Design Systems, Inc.
Loading snapshot worklib.testbench:v ..................... Done
*Verdi* Loading libsscore_ius152.so
ncsim> source /usr/cad/cadence/INCISIV/cur/tools/inca/files/ncsimrc
ncsim> run
----------------------------------------

-              FLP_ADDER_7              -

----------------------------------------

----------------------------------------

All testdata correct!

Avg error in  100 testdata: 5.884856e-09

----------------------------------------

Simulation complete via $finish(1) at time 5350 NS + 0
./testbench.v:250         $finish;
ncsim> exit
[2022_alu03@devotion tb]$
```

3、TB（post_sim）

```
// FXP_ADDER / FXP_MUL / FLP_ADDER / FLP_MUL / FLP_ADDER_7 / FLP_ADDER_4 / FLP_MUL_4
`define FLP_adder

// Standard Delay Format File
`define SDFFILE    "./FXP_adder_syn.sdf"

`timescale 1ns/1ps
`define CYCLE 5.0
`define DATA_NUM 100
`define FILE_A "./a.txt"
`define FILE_B "./b.txt"
`ifdef FXP_adder
    `define FXP
`elsif FXP_mul
    `define FXP
```

可以修改來測試各種電路

同時修改成對應 SDF

```
`ifdef FXP_adder
    FXP_adder test_module( .a(input_a), .b(input_b), .d(outcome));
`elsif FXP_mul
    FXP_mul   test_module( .a(input_a), .b(input_b), .d(outcome));
`elsif FLP_adder
    FLP_adder test_module( .a(input_a), .b(input_b), .d(outcome));
`elsif FLP_mul
    FLP_mul   test_module( .a(input_a), .b(input_b), .d(outcome));
`elsif FLP_adder_7
    FLP_adder test_module( .a(input_a), .b(input_b), .d(outcome), .rst(RST), .clk(CLK));
`elsif FLP_adder_4
    FLP_adder test_module( .a(input_a), .b(input_b), .d(outcome), .rst(RST), .clk(CLK));
`elsif FLP_mul_4
    FLP_mul   test_module( .a(input_a), .b(input_b), .d(outcome), .rst(RST), .clk(CLK));
`endif

`ifdef SDF_FILE
    initial $sdf_annotate(`SDF_FILE, test_module);
`endif
```

這邊要和呼叫的 Module Instance name 一樣

3、TB（post_sim）

```
ncsim> source /usr/cad/cadence/INCISIV/cur/tools/inca/files/ncsimrc
ncsim> run
----------------------------------------

-                 FLP_MUL                -

----------------------------------------

----------------------------------------

All testdata correct!

Avg error in  100 testdata: 2.145374e-08

----------------------------------------

Simulation complete via $finish(1) at time 5100 NS + 0
./testbench.v:250         $finish;
ncsim> exit
```

3、TB

- outcome：你的硬體輸出
- answer：軟體計算正確答案

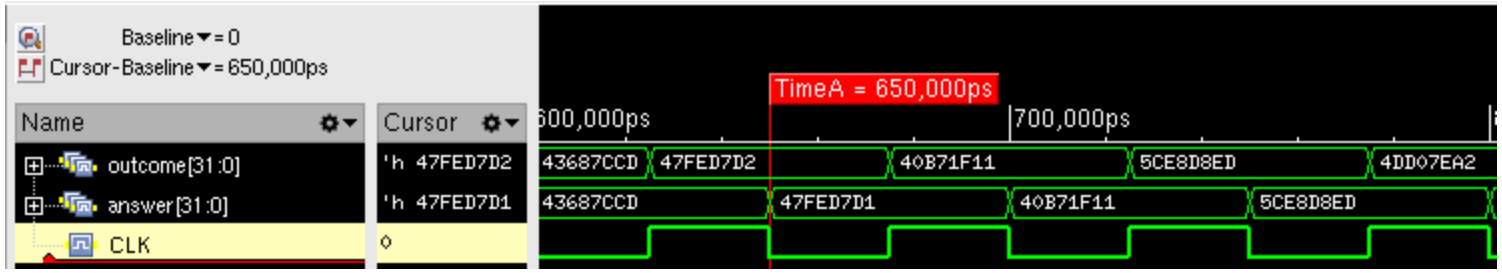

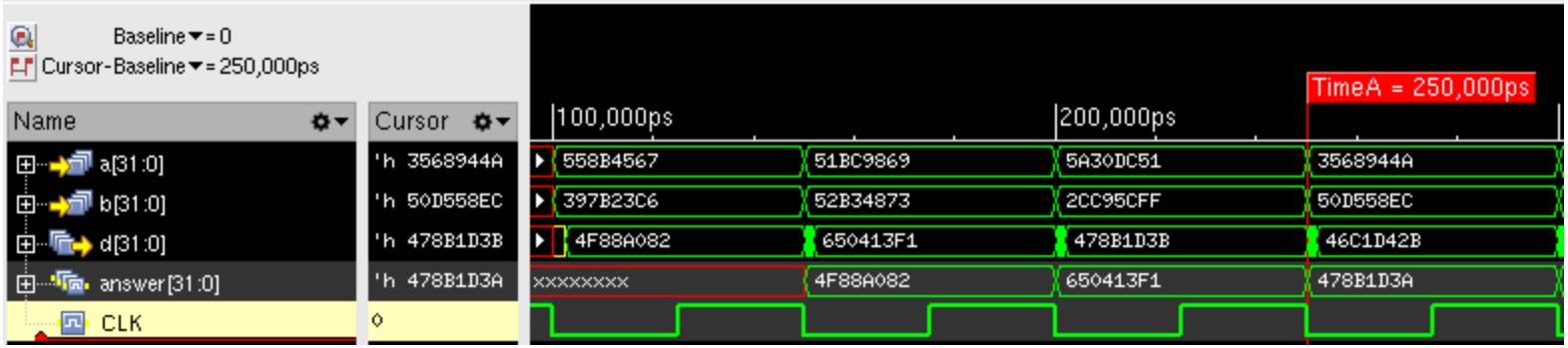

4. HW1 目錄建立方式與流程

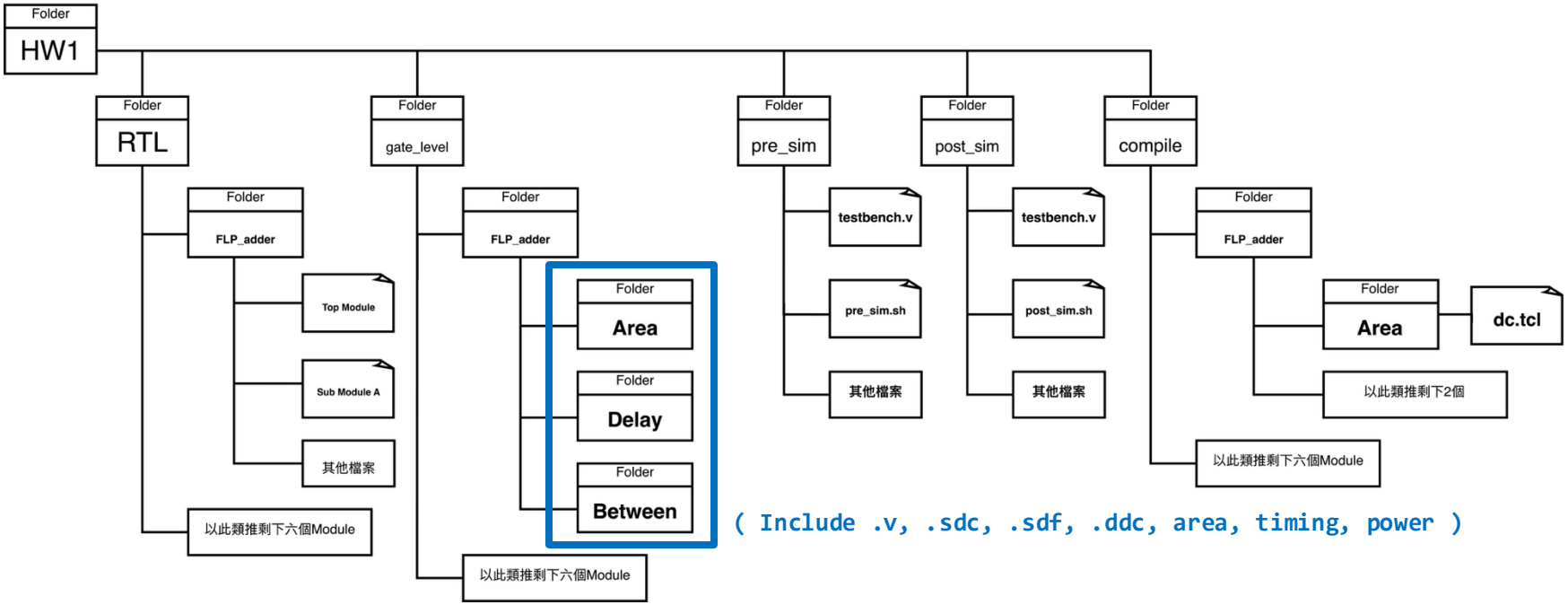

(Include .v, .sdc, .sdf, .ddc, area, timing, power)

4. HW1 目錄建立方式與流程

1. Write Verilog Code
2. Write Testbench
3. Run Pre Synthesis Simulation – VCS
4. Snapshot Waveform (Pre-sim) – nWave
5. Logic Synthesis – Design Compiler
6. Run Post Synthesis Simulation – VCS
7. Snapshot Waveform (Post-sim) – nWave
8. Complete Report

5. Report.pdf

- 至少要符合以下所有內容
  - 如果有任何硬體測試資料沒有滿分，可以在結果報告說明已完成的部分，和出錯的地方與問題分析，會依狀況部分給分
  - 有完成(All test data correct)則不須呈現程式碼
  - 畫出設計的硬體架構圖並說明
  - 在架構圖中明確標示pipeline落在哪(哪些元件為同一階)
  - 列出各階pipeline的delay
  - 明確標示pipeline的critical path在哪階
    列出delay最佳化、 midpoint、 area最佳化
  - 數據表格 – area delay power

5. Report.pdf

- 各階pipeline的delay與critical path 表格

		Stage 1	Stage 2	Stage 3	Stage 4	Stage 5	Stage 6	Stage 7	Critical Path	
FLP_Adder_7Stage										
	Delay									
	Area									
	Between									
FLP_Adder_4Stage										
	Delay									
	Area									
	Between									
FLP_Mul_4Stage										
	Delay									
	Area									
	Between									

5. Report.pdf

- 數據表格 (顏色只用於輔助理解Latency計算公式，實際繳交不需加入顏色)

取消

		Area (um^2)			Delay(ns)	Latency	Power (W)		
		CL	SL	Total			Dynamic	Leakage	Total
FXP_Adder	area					(= Delay)			
	delay					(= Delay)			
	between					(= Delay)			
FLP_Adder	area					(= Delay)			
	delay					(= Delay)			
	between					(= Delay)			
FLP_Adder_7_Stage	area					(= Delay * 7)			
	delay					(= Delay * 7)			
	between					(= Delay * 7)			
FLP_Adder_4_Stage	area					(= Delay * 4)			
	delay					(= Delay * 4)			
	between					(= Delay * 4)			
FXP_Multiplier	area					(= Delay)			
	delay					(= Delay)			
	between					(= Delay)			
FLP_Multiplier	area					(= Delay)			
	delay					(= Delay)			
	between					(= Delay)			
FLP_Multiplier_4_Stage	area					(= Delay * 4)			
	delay					(= Delay * 4)			
	between					(= Delay * 4)			

5. Report.pdf

- 數據表格

```
stage2/conversion_sign/U15/Y (AO22_X1M_A9TR)                0.09       2.87 r
stage2/conversion_sign/mantissa_out[9] (conversion_sign)
                                                            0.00       2.87 r
stage2/mantissa_unsigned_reg_9_/D (DFFRPQ_X2M_A9TR)         0.00       2.87 r
data arrival time                                                      2.87

clock clk (rise edge)                                       3.00       3.00
clock network delay (ideal)                                 0.00       3.00
stage2/mantissa_unsigned_reg_9_/CK (DFFRPQ_X2M_A9TR)
clock * (number of pipeline stage) = Latency (表格 Latency欄位)  0.00       3.00 r
library setup time                                         -0.05       2.95
data required time                                                     2.95
-------------------------------------------------------------------------
data required time                                                     2.95
data arrival time                                                     -2.87
-------------------------------------------------------------------------
slack (MET)                                                            0.09
```

表格 Delay 欄位需要填入的部分

需要 >= 0 且有 slack（MET）

```
Number of ports:                          1545
Number of nets:                           3576
Number of cells:                          2029
Number of combinational cells:            1834
Number of sequential cells:                172
Number of macros/black boxes:                0
Number of buf/inv:                         409
Number of references:                        4

Combinational area:               2369.833178
Buf/Inv area:                      218.635199
Noncombinational area:             780.191961
Macro/Black Box area:                0.000000
Net Interconnect area:      undefined  (Wire load has zero net area)

Total cell area:                  3150.025139
Total area:                 undefined

Hierarchical area distribution
------------------------------
```

Combinational Logic （表格 CL 欄位）

Sequential Logic （表格 SL 欄位）

Toral Area（表格 Total 欄位）

```
---------
Total Dynamic Power    = 334.1819 uW   (100%)

Cell Leakage Power     =  29.8890 uW
```

Dynamic Power（表格 Dynamic 欄位）

Leakage Power（表格 Leakage 欄位）

請轉換單位: uW → W (表格要求)

Dynamic + Leakage = Total（表格 Total 欄位）

Power Group	Internal Power	Switching Power	Leakage Power	Total Power	(%)	Attrs
io_pad	0.0000	0.0000	0.0000	0.0000	(0.00%)	
memory	0.0000	0.0000	0.0000	0.0000	(0.00%)	
black_box	0.0000	0.0000	0.0000	0.0000	(0.00%)	
clock_network	0.0000	0.0000	0.0000	0.0000	(0.00%)	
register	0.2055	4.9244e-03	7.7363	0.2182	(59.93%)	
sequential	0.0000	0.0000	0.0000	0.0000	(0.00%)	
combinational	8.1768e-02	4.1976e-02	22.1417	0.1459	(40.07%)	

6. 繳交檔案

1. 直接複製整個HW1資料夾到Server內繳交
   - `cp -r /MasterClass/M143040045_ALU/HW1/ /MasterClass/Homework-Submit/M143040045_ALU/`
   - **請替換 M143040045_ALU 成自己的學號**
2. 上傳加入封面的Report.pdf到網路大作業區
3. Due: 10/13 23:59

7、評分標準

- (40%) RTL code
  - 8% per module (Fix Point 不評分)
- (30%) Gate-level module
  - 2% per module (Fix Point 不評分)
- (30%) Final report (*只收PDF)
  - 10% 架構圖 & Pipeline
  - 5% 各階Pipeline數據(area, delay mid)
  - 10% 數據表格
  - 5% 心得

Pipeline

- 5 stage = 4 pipeline register
- 有需要可以參考 https://youtu.be/lAnguwdL8K4

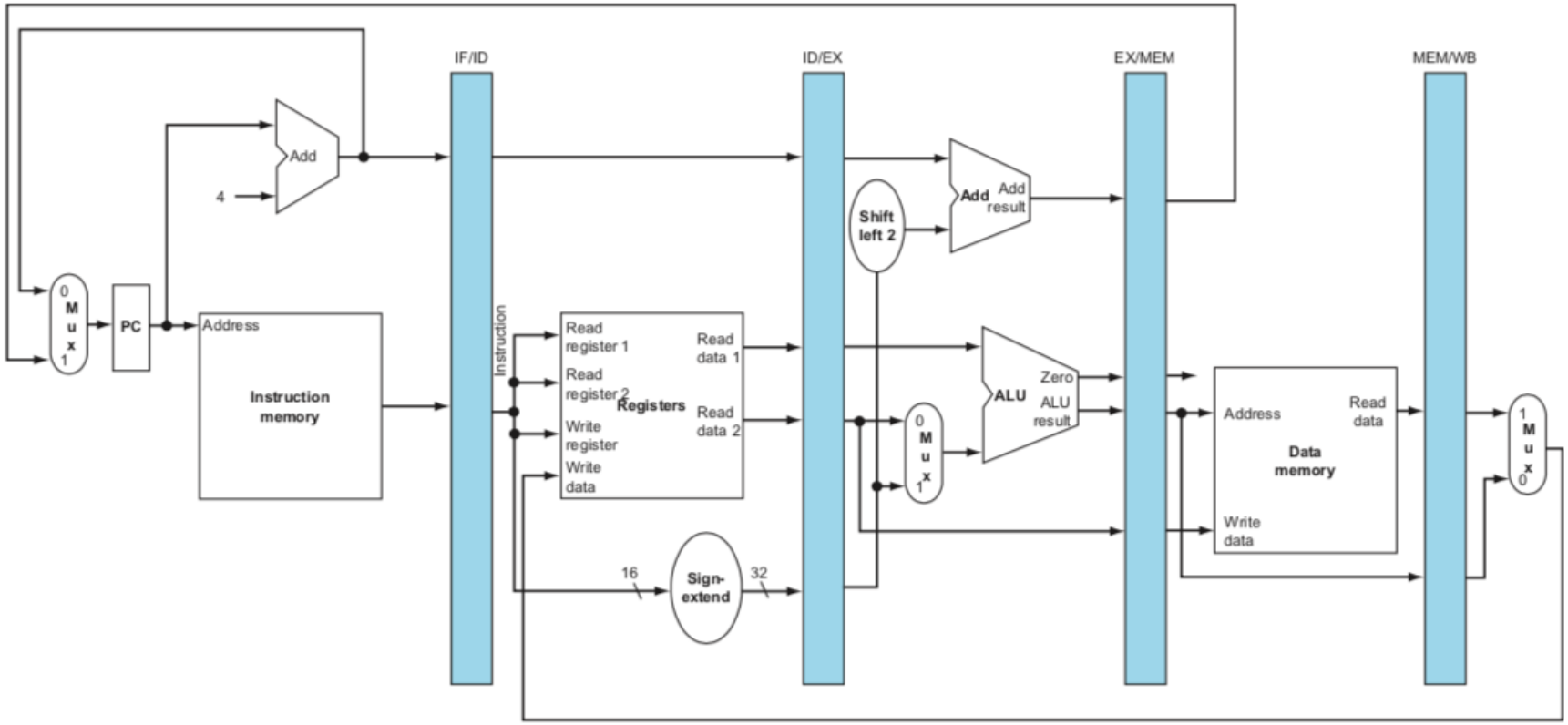

Pipeline

- dc.tcl 設定教學

更改成自己的 Verilog Code 內 Moule Name

可以自訂輸出的 txt 檔名

```
#Each Pipeline Delay
ungroup -all
report_timing -from [all_inputs]
uplevel #0 { report_timing  -through { stage1/* } -path full -delay max -nworst 1 -max_paths 1 -significant_digits 2 -sort_by group } > $Path_Syn/timing_report_stage1.txt
uplevel #0 { report_timing  -through { stage2/* } -path full -delay max -nworst 1 -max_paths 1 -significant_digits 2 -sort_by group } > $Path_Syn/timing_report_stage2.txt
uplevel #0 { report_timing  -through { stage3/* } -path full -delay max -nworst 1 -max_paths 1 -significant_digits 2 -sort_by group } > $Path_Syn/timing_report_stage3.txt
uplevel #0 { report_timing  -through { stage4/* } -path full -delay max -nworst 1 -max_paths 1 -significant_digits 2 -sort_by group } > $Path_Syn/timing_report_stage4.txt
report_timing -from [all_outputs]
```

```
module stage1 ( a, b, exp_A, exp_B, mant_A, mant_B, sign_A, sign_B );

    input  signed [31:0]a, b;
    output sign_A, sign_B;
    output [7:0]exp_A, exp_B;
    output [27:0]mant_A, mant_B;
    wire [27:0] temp_mant_A, temp_mant_B;
    wire agtb;

    assign temp_mant_A = a[31] ? { 1'b1, {2'b01, a[22:0]}, 2'b0 } : { 1'b0, {2'b01, a[22:0]}, 2'b0 };
    assign temp_mant_B = b[31] ? { 1'b1, {2'b01, b[22:0]}, 2'b0 } : { 1'b0, {2'b01, b[22:0]}, 2'b0 };

    assign agtb = a[30:23] > b[30:23];
    assign sign_A = agtb ? a[31] : b[31];
    assign sign_B = agtb ? b[31] : a[31];
    assign exp_A  = agtb ? a[30:23] : b[30:23];
    assign exp_B  = agtb ? b[30:23] : a[30:23];
    assign mant_A = agtb ? { temp_mant_A } : { temp_mant_B };
    assign mant_B = agtb ? { temp_mant_B } : { temp_mant_A };

endmodule
```